Centralina elettronica
Control unit
Armoires de commande
Steuerung
Récepteur
Centralitas
Unidades de controlo

900CT - 2
SKL - 2

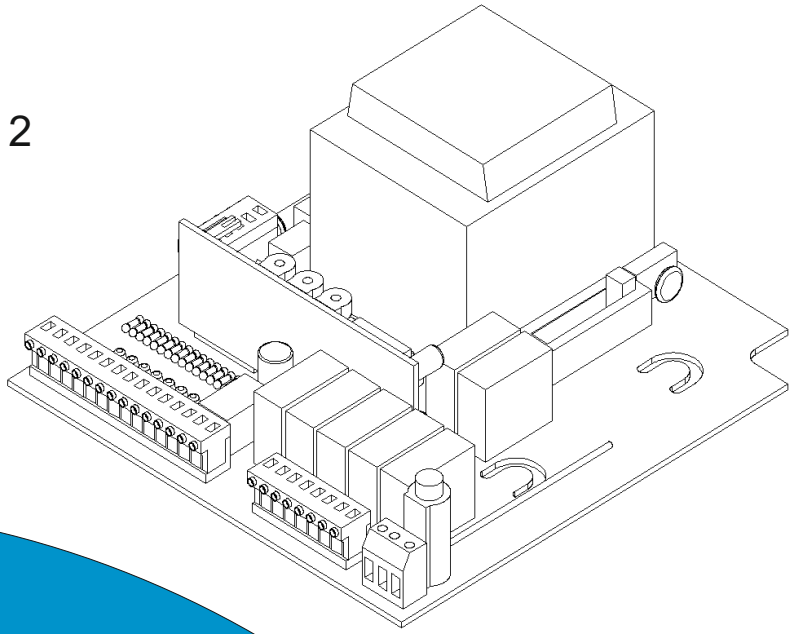

(I) MANUALE ISTRUZIONI
(GB) INSTRUCTION MANUAL
(F) LIVRET D'INSTRUCTIONS
(D) ANLEITUNGS HEFT
(E) MANUAL DE INSTRUCCIONES
(P) MANUAL DE INSTRUÇÕES

CE

INDEX

GB

INDEX	2
MODELS AND FEATURES TECHNICAL DATA	3
SET PANEL 900CT-2	4
TERMINAL BOARD CONNECTIONS	5
SET PANEL 900SKL - 2	6
INSTALLATION STANDARD OPERATION	7 - 8
STANDARD OPERATION OPTIONS	8
TESTING MAINTENANCE / DISPOSAL	9

THIS HANDBOOK IS APPOINTED FOR THE INSTALLER ONLY
The installation has to be carried exclusively by qualified personnel according to the curret law disposal

MODELS AND SPECIFICATIONS

900CT-2	Control unit 230V box for two motors, with electric clutch, logical control card,pre-set for radio card insertion.

TECHNICAL DATA

SUPPLY	230Vac/50-Hz
OUTPUT SUPPLY ACCESSORIES	24Vdc/400mA
OPERATING TIME	2-60 sec
PAUSE TIME	2-180 sec
PROTECTION DEGREE	IP 54
OPERATING TEMPERATURE	-20°/+70°

Carefully read all instructions prior to installation. Failure to observe the above instructions, improper use or connection errors may impair the safety or correct operation of the device and consequently the entire system.
The manufacturer declines all liability for malfunctions and/or damage caused by failure to observe instructions and specifications.

The company reserves the right to apply modifications for product improvements.

SET PANEL 900CT-2

GB

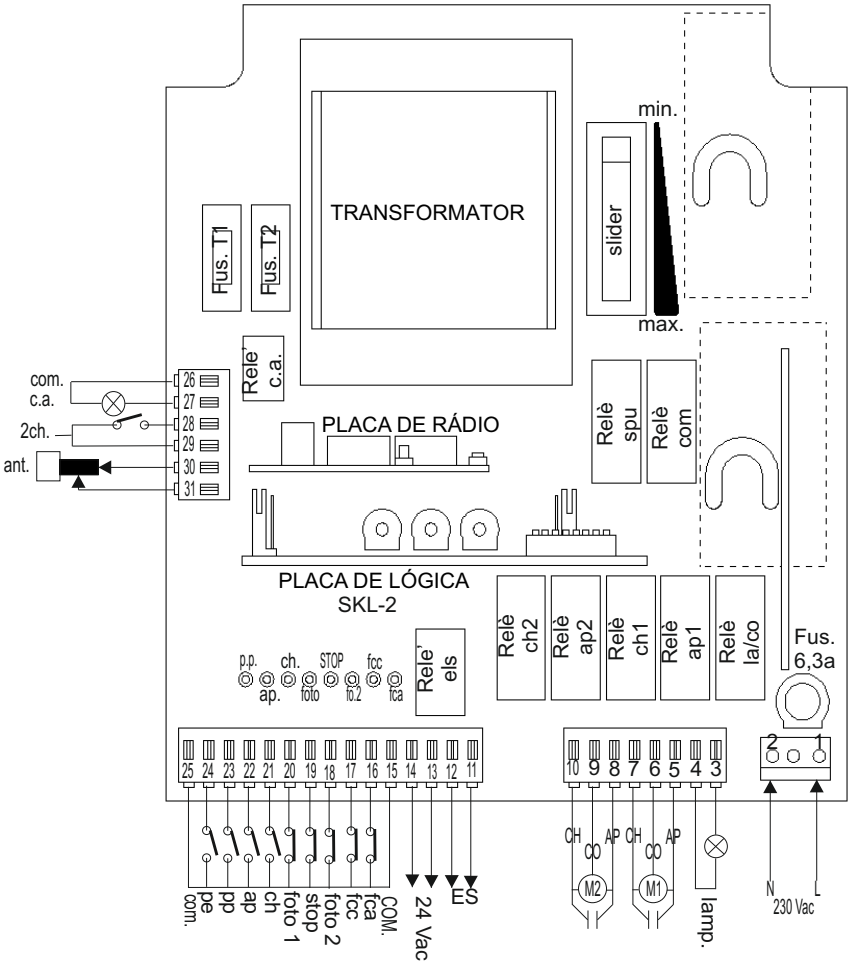

TERMINAL BOARD CONNECTIONS

1-2	230VAC	230Vac 50 Mhz mains power supply.
3-4	FLASHING UNIT	Outlet for flashing/courtesy lamp (selection between flashing unit and courtesy lamp is set on the relative J2 jumper) max. 230Vac 25W for flashing unit, max. 100W for courtesy lamp.
5-6-7	MOTOR M1	Output for motor 1 with delay on opening; time interval is fixed at one second. 230Vac 400VA max.
8-9-10	MOTOR M2	Output for motor 2 delayed on closing by means of trimmer TR of SKL-2. 230Vac 400VA max.
11-12	ELECTRIC LOCK	12Vdc output that remains active from 0.5 seconds before to 4 seconds after start-up of motors on opening. 15W max.
13-14	24Vac	24Vac output for auxiliary power supply (photo, radio etc.)
15-16	OPEN LIMIT SWITCH	Input for open limit switch
15-17	CLOSE LIMIT SWITCH	input for close limit switch
15-18	PHOTOCELL 2	Input for safety devices also on opening (photcells, safety edges)
15-19	STOP	Input for stop command (emergency, external safety lock)
15-20	PHOTOCELL 1	Input for safety devices (photocells, safety edges)
21-25	CLOSE	Input for close command
22-25	OPEN	Input for open command
23-25	STEP	Input for sequential operating mode (open stop close stop)
24-25	PEDESTRIAN	Input for pedestrian command
25-15	COMMON	Common entrance
26-27	G.O. IND. LAMP	Output for Gate Open indicator lamp 24Vac max 2W
28-29	OUTPUT 2 CHANNEL	Output 2° channel SK radio.
30-31	AERIAL	Input for radio receiver aerial

SET PANEL 900SKL-2

GB

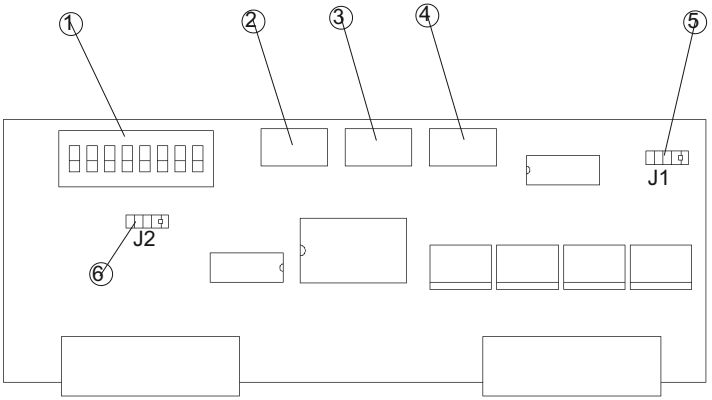

1 DIP SWITCH FUNCTION	See standard operation options.
2 TRIMMER TP	Adjustment of pause time before automatic gate closing from 2sec to 3min.
3 TRIMMER TL	Adjustment of motor working time from 0 to 60 sec.
4 TRIMMER TR	Adjustment of closing delay time of motor M2 from 2 to 10 sec
5-6 J1 - J2 SELECTION JUMPER	See standard operation options.

INSTALLATION

Device installation must be carried out professionally by personnel with qualifications as specified by current legislation.
To guarantee safety of the operator and prevent damage to parts during connections, both low voltage (230 V) and very low voltage (24 V) or when connecting the radio card, the control unit must always remain disconnected from the power supply.
Always keep power supply cables separate from control cables. In the case of power cables, motor lines, flashing unit/courtesy lamp lines and electric lock, use cables with a minimum section of 1,5 mm 2; in the case of auxiliary utilities, commands and safety contacts, use cables with a minimum section of 0,5 mm 2. When control cables are very long (over 30 m) disconnection by means of relays in the control unit is recommended.
If a fuse trips, after eliminating the cause, replace with a version with the same characteristics.
Install all safety devices, limit switches, photocells, safety edge, and stop pushbutton.
If one or more of the safety devices are not installed, insert a jumper in the relative terminals with the controls common contact.
All N.C. contacts related to the same input must be connected in series.
All N.O. contacts related to the same input must be connected in parallel.
Install disconnection elements on the mains power supply in an accessible location.

STANDARD OPERATION

OPEN	The open command activates the flashing unit and then starts gate opening.
CLOSE	The close command activates the flashing unit and then starts gate closing.
STOP	The stop command stops the gate and awaits a new command.
STEP	The step command acts on the gate via a radio control or pushbutton, setting the system to different phases: - from gate open it anticipates the closing phase - from moving gate it changes to the stop phase - from closed gate it changes to the opening phase

PEDESTRIAN	The pedestrian command enables opening of one gate leaf on a 2-leaf model. If dip switch 1 is selected (sliding mode) the gate opens for 1/3 of the working time.
DOOR OPEN INDICATOR	The gate open indicator lamp notifies the user of the gate status. Gate closed - lamp off. Gate in opening phase - slow flashing lamp. Gate open - lamp lit. Gate in closing phase - fast flashing lamp.
PHOTOCELL	The photocell command ensures that on interruption of the light beam, all controls are inhibited. During the opening phase, if the beam is interrupted, the gate completes travel to the normal pause position. During the pause phase, if the beam is interrupted, the gate remains in this status until the beam is restored. When the beam is restored, the gate remains in pause for a brief interval (1/4 of the set time) and then closes. During the closing phase, if the beam is interrupted, the gate changes to the opening phase.
PHOTO 2	The command in photo 2 is activated in the opening phase causing gate shutdown. On reset gate opening is resumed. If shut down during closing, opening is resumed.
STARTING TORQUE	Thrust is activated on opening and closing setting the maximum force for 1 sec. to then return to the set power of the autotransformer.
WORKING TIME	Working time range from 2 sec. to 60 sec. (with dip switch 4 inserted regulation range is from 2 sec. to 120 sec.). The adjustment trimmer to facilitate brief time settings on gate movements has an exponential control range (finer at the start of trimmer travel and is less so at the end).
PAUSE TIME	Pause time range from 2 sec. to 180 sec. N.B.: During opening, if the photocell beam is interrupted, the pause time if reduced to 1/4 of the set time.
FLASHING UNIT OR COURTESY LAMP	The courtesy lamp uses the same relay as the flashing unit, and extends operation time is selected for a fixed interval of 3 min.

STANDARD OPERATION OPTIONS

JUMPER J1	NORMAL/APARTMENT BLOCK OPERATION - This selection enables modifications to the operation of the PP input in apartment blocks; on each command via radio or pushbutton opening is activated.
JUMPER J2	FLASHING UNIT/COURTESY LAMP FUNCTION - This enables the user to select whether to enable the output for a flashing unit or that of a courtesy lamp.
DIP SWITCH 1	SLIDING MODE - This selection enables cancellation of delays on leaf 2 and partial opening of motor M2 with the PEDESTRIAN command.
DIP SWITCH 2	PHOTOCELL PAUSE ON OPENING FUNCTION - This selection enables the user to change the standard photocell operating mode. During the opening phase, if the beam is interrupted the gate stops and when the photocell beam is restored the gate resumes opening. During the closing phase, if the photocell beam is interrupted the gate stops and when the beam is restored the gate inverts movement to open again.
DIP SWITCH 3	AUTOMATIC CLOSING DISABLE FUNCTION - This selection enables the user to disable the automatic closing function. On completion of opening the gate is not set to pause for the set time, but remains stationary on standby for a new close command.
DIP SWITCH 4	WORKING TIME EXTENSION FUNCTION - This selection enables the user to double the working time of the gate from the setting of 0 to 120 sec.
DIP SWITCH 5	OVERPUSHING STROKE FUNCTION - This selection enables the system , on the initial opening phase, to perform a brief closure movement of the motors to facilitate mechanical release of the electric lock.
DIP SWITCH 6	FLASHING UNIT WARNING TIME FUNCTION - This selection enables activation of the flashing unit 3 seconds before each opening or closing movement.
DIP SWITCH 7	STEP MODE WITH PAUSE FUNCTION - This selection enables the user to change from the standard operation of step mode (open stop close) to an open-pause-close-pause sequence command.
DIP SWITCH 8	NOT USED

DIP SWITCH ON
FUNCTION ACTIVE

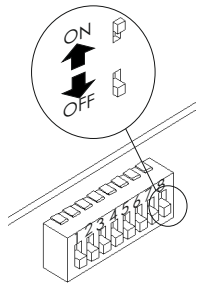

TESTING

GB

Testing of the entire system where the control unit is installed must be performed by qualified personnel who must conduct all tests according to the associated risks.

BEFORE
POWERING UP
THE AUTOMATION

- check all connections
- set all trimmers to minimum
- set all dip switches as required
- set the adjustment trimmer to minimum power

On completion of the above, the unit can be started up.

POWERING UP

- ensure correct operation of all inputs
- adjust the motor output to ensure compliance with current standards by means of the relative trimmer
- ensure correct direction of motor rotation
- set the work and pause trimmers
- perform the final operation test

MAINTENANCE / DISPOSAL

In the event of malfunctions, ensure exclusively qualified personnel perform repairs, maintenance or adjustments.

Dispose of all materials in compliance with current regulations.